STAXX
STAXX MATERIAL HANDLING EQUIPMENT CO., LTD

HAND PALLET TRUCK

BFE25/30

Make
Your Job
Easier

www.staxxmhe..com

BFE25/30

HAND PALLET TRUCK

MODEL				BFE25		BFE30	
FEATURE							
1.1	Capacity		kg	2500		3000	
1.2	Pump type			Casted Iron pump		Casted Iron pump	
WHEEL							
2.1	Wheel(drive / load) type			PU / RU / Nylon		PU / RU / Nylon	
2.2	Size of steering wheel	ΦD	mm	180*50	200*50	180*50	200*50
2.3	Size of loading wheel(single wheel)	Φd	mm	74*93	80*93	74*93	80*93
2.4	Size of loading wheel(double wheel)	Φd	mm	74*70	80*70	74*70	80*70
DIMENSIONS			mm				
3.1	Lifting height	h	mm	115	115	115	115
3.2	Max. Fork lifting height	H	mm	190	200	190	200
3.3	Lowered height of fork	H1	mm	75	85	75	85
3.4	Fork outside distance	W	mm	520 / 550 / 685		520 / 550 / 685	
3.5	Fork length	L	mm	900 / 1100 / 1150 / 1220		900 / 1100 / 1150 / 1220	
3.6	Fork width	S	mm	160		160	
3.7	Steel thickness(after painting)		mm	3		3.75	
3.8	Weight		kg	60-72		65-78	
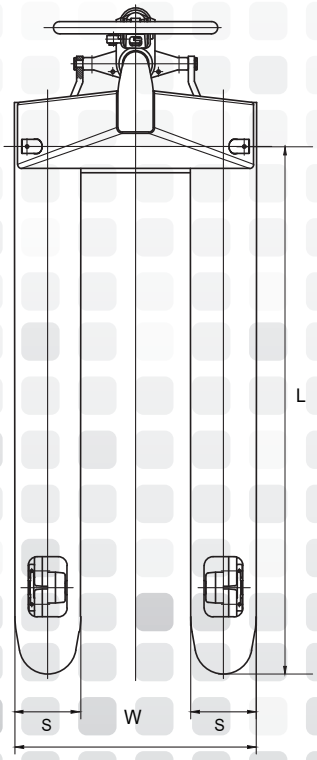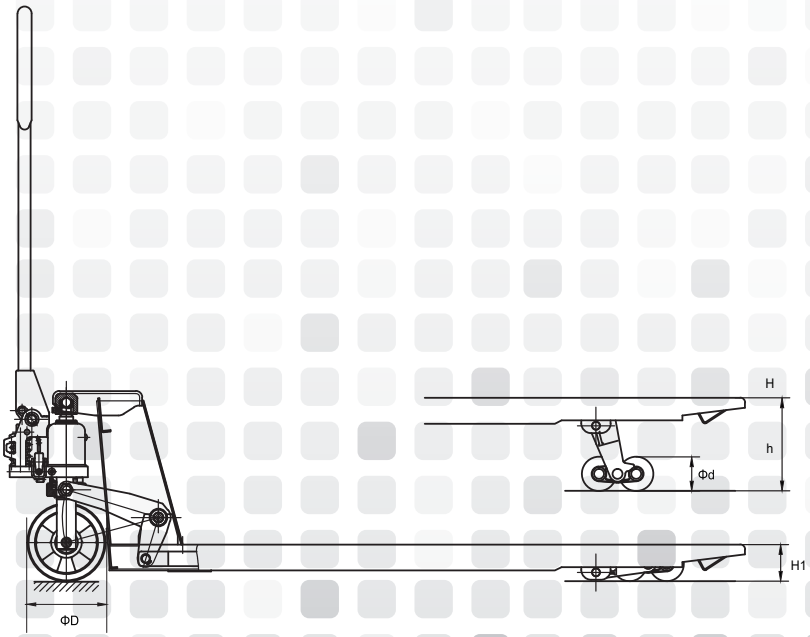
www.staxxmhe.com